FIRST ANGLE PROJECTION

(ALL DIMENSIONS ARE IN mm)

DRG. NO. 0 445 31 64 053

TOOL LIST		
IT.NO.	TOOL NO.	DESCRIPTION
001	1577838	SNAP GAUGE 89MM
001	1577839	SNAP GAUGE 79MM
001	1577840	HOLDING FIXTURE WITH REF. BLOCK
001	1577837	$585^{+0.2}_{0}$ PIN GAUGE

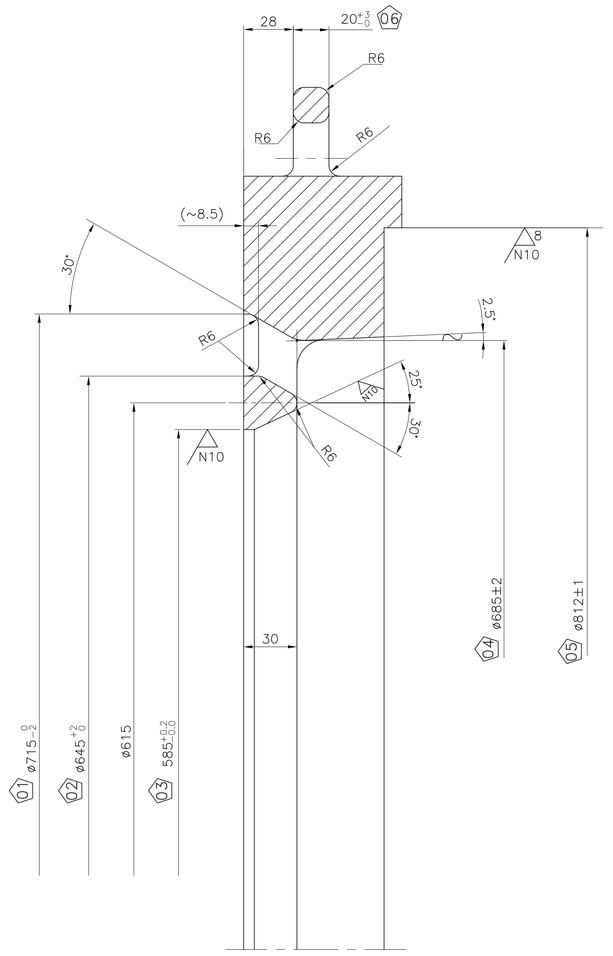

SECTION A–A

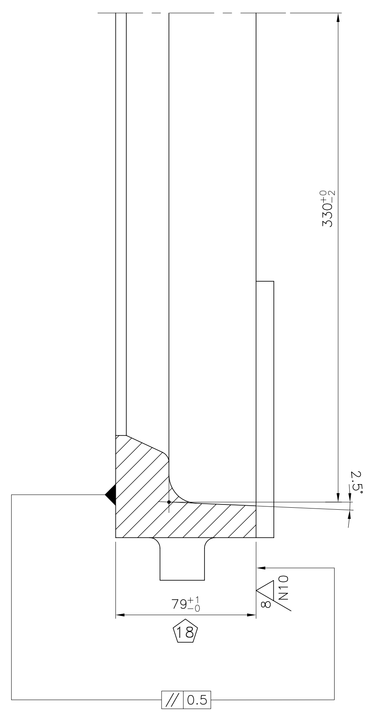

SECTION C–C

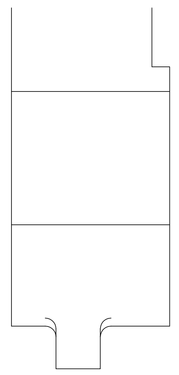

SECTION B–B

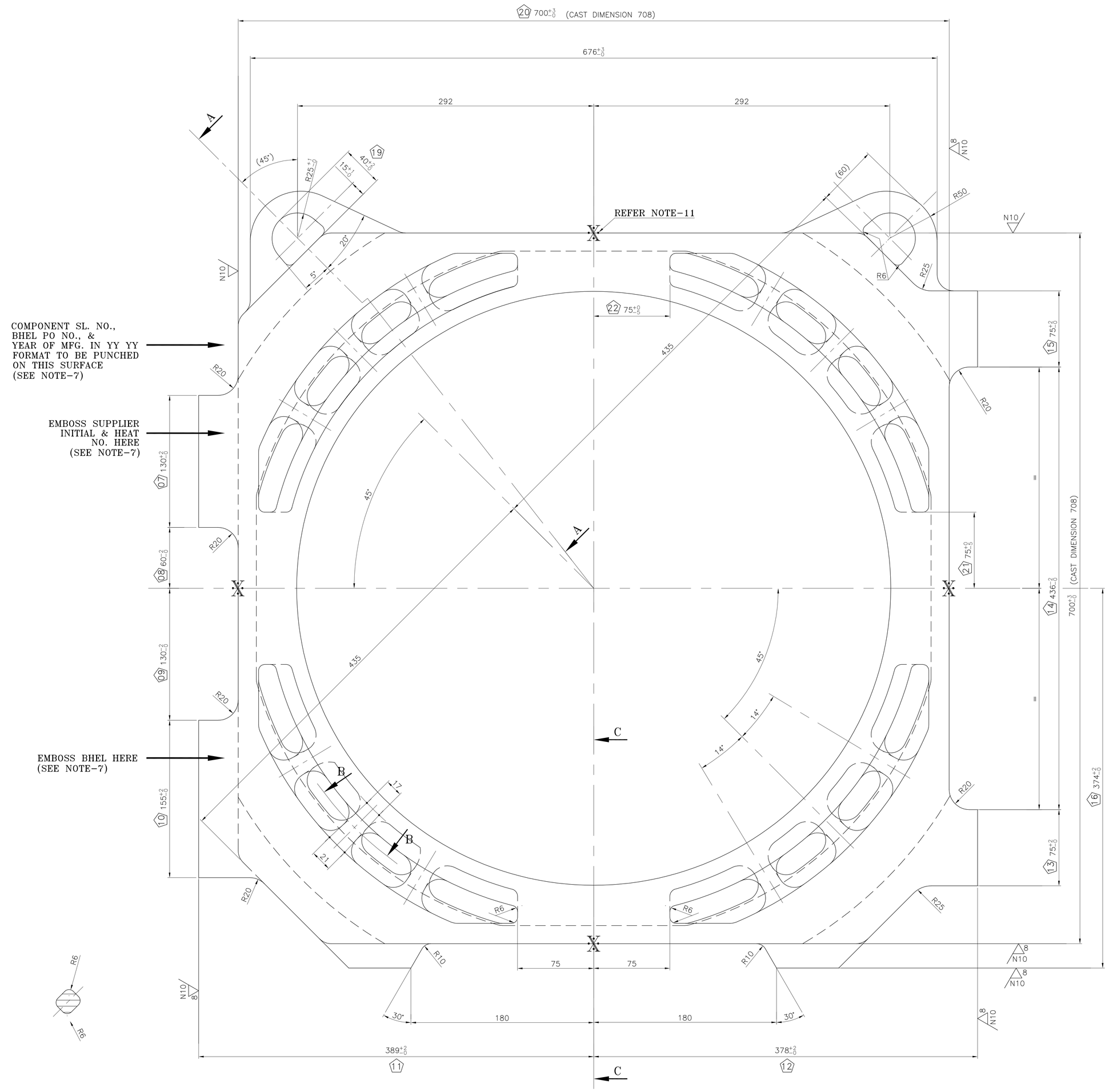

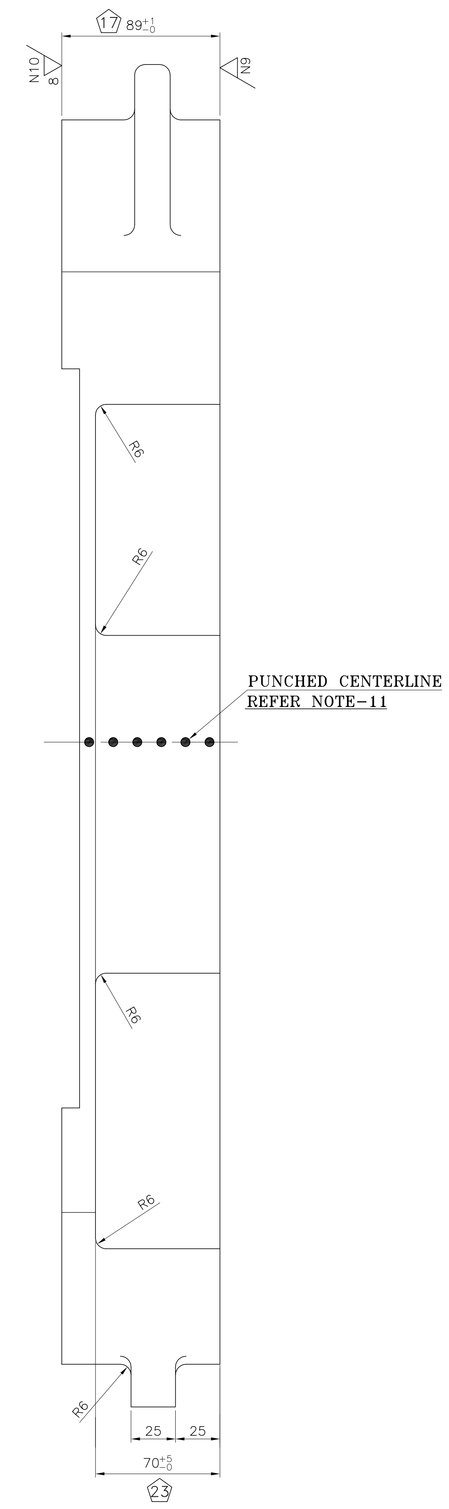

NOTES:–

1. CASTING SHALL BE CAREFULLY SCALED & CLEANED.
2. ~~MATERIAL: CARBON STEEL CASTING Gr. 230–450 W TO IS–1030'89.~~
3. AIR POCKETS SHALL BE PROPERLY DRESSED & REQUIRED RADIUS SHALL BE CAREFULLY MAINTAINED.
4. ~~RADIOGRAPHIC– CASTING MADE ACCORDING TO SPECN. NO. TM–11486 (LATEST REV.) SHALL BE SUBJECTED TO RADIOGRAPHIC TEST & DIMENSIONAL CHECKS TO BE CARRIED OUT 100%.~~
5. ~~METALLURGICAL TESTS TO BE CARRIED OUT BY BHEL.~~
6. FIRM SHOULD HAVE THEIR ON FOUNDRY DULY APPROVED BY RDSO AS CLASS–A FOUNDRY FOR CASTING THE RAW MATERIAL OF SPECIFIED GRADE (CARBON STEEL CASTING TO IS : 1030' 89 GRADE 230–450 W) FOR ITEM STATOR CHAMBER DE & NDE OR THEY HAVE TO SUBMIT ADEQUATE DOCUMENTARY EVIDENCE REGARDING SOURCING OF RAW MATERIAL (CASTING) FROM RDSO APPROVED CLASS–A FOUNDRY ONLY.
7. EMBOSSING & PUNCHING TO BE DONE AT THE SHOWN LOCATION BY CASTING SUPPLIER. SIZE OF EMBOSSING/PUNCHING TO BE 5–20mm. EMBOSSING & PUNCHING SHOULD NOT BE MACHINED/DAMAGED DURING MACHINING AND SHALL BE RETAINED.
8. QAP FOR CASTING TO BE AS PER QTM/QAP/VENDOR/13–14/001 (LATEST REV.).
9. ADDITIONAL MATERIAL SHALL NOT BE PROVIDED ON SURFACES WHERE MACHINING SYMBOL IS NOT INDICATED. TOLERANCES ON UNTOLERATED CASTING SURFACES SHALL BE AS PER IS: 4897, CLASS–2.

CONTD.

CONTD.

10. ~~a) CTQ DIMENSIONS TO BE CHECKED & ENSURED ON 100% JOBS. IF CTQ DIMENSION IS CHECKED BY GAUGE ON 100% JOBS, SAME SHALL BE ENSURED BY CHECKING THROUGH INSTRUMENT (IF FEASIBLE BY INSTRUMENT) ON RANDOM BASIS IN MIN. 10% JOBS.~~

    ~~b) REMAINING DIMENSIONS TO BE CHECKED ON SAMPLE BASIS. QUANTUM OF INSPECTION SHALL BE AS GIVEN BELOW (AT LEAST ONE NUMBER).~~

SL.NO.	CHECKING PARAMETER		T. P. (TASK PERFORMER)	BHEL Q.C.
001	CTQ DIMS.	DIMENSIONAL TOLERANCE	100%	20%
		GEOMETRICAL TOLERANCE	100%	20%
002	REMAINING DIMS.		100%	5%

11. CENTERLINE TO BE PUNCHED ON STATOR CHAMBER ON ALL FOUR SIDE FACE ALONG THE WIDTH.
12. ALL 23 NOS. '⬠' MARKED DIMENSIONS ARE CRITICAL TO QUALITY (CTQ) & SL. NO. OF CTQ DIMENSIONS ARE INSCRIBED IN ⬠ e.g. (23).
13. SURFACE FINISH OF UNMACHINED CASTED SURFACE TO BE AS PER IS:3073.

SURFACE ROUGHNESS VALUE TO IS:3073												
GRADE NUMBER	N1	N2	N3	N4	N5	N6	N7	N8	N9	N10	N11	N12
Ra μ m	0.025	0.05	0.1	0.2	0.4	0.8	1.6	3.2	6.3	12.5	25	50
SYMBOL												

QTY. VAR OO	REMARKS	VAR. NO.	ITEM NO.	DESCRIPTION	STD	DRAWING NO.	IT.NO. VAR.	MATL. CODE	MATL. SPCN.	A/C	UNIT	UNIT WT.	QTY.	US	ZONE
				STATOR CHAMBER (DE) (CNC MACHD.)		TM–11486					KG	94			
	R.WT.–115KG			STATOR CHAMBER (DE) (CAST)		TM–11486									

ADDITIONAL INFORMATION: 1TWD.096.017. (ALT.5)

STATUS OF DRAWING

DISTRIBUTION OF PRINTS: TME–1, TXM–3, TNX–1

TYPE OF PRODUCT OR NAME OF CUSTOMER/PROJECT: TRACTION MOTOR 6FRA–6068

BHARAT HEAVY ELECTRICALS LTD. BHOPAL

	NAME	SIGN	DATE
DRN.	BHAGAT	–sd–	01/09/10
CHD.	D.K	–sd–	01/09/10
APPD.	A.S	–sd–	01/09/10

DEPT. TME, CODE 405 | UNTOL. DIMS. GR. | SCALE | WEIGHT (K.G.) 94 | REF. TO ASSY. DRG. 0 445 31 64 052 | ITEM NO. 002 | NO. OF ITEM

TITLE: STATOR CHAMBER(DE) (CNC MACHD.)

DRAWING NO. 0 445 31 64 053 | REV. 09 | SHT. NO. 01 | NO. OF SHT. 01

REV.	DATE	ALTERED	CHECKED	APPROVED	ZONE	NOTES
09	19.8.19	SDB	ABHIJIT	ABHIJIT		NOTES–2, 4, 5 & 10 DELETED. NOTE–13 ADDED.
08	05.7.19	SDB	ABHIJIT	ABHIJIT		CRITICAL TO QUALITY DIMS. ARE "⬠" MARKED AND NUMBERED. NOTE–12 ADDED.
07	04.12.17	SDB	ABHIJIT	ABHIJIT		LIFTING LUG VIEW MODIFIED. NOTE–11 & SEC.–CC ADDED.
06	22.5.17	SDB	ABHIJIT	ABHIJIT		NOTES–7 TO 10 ADDED.
05	4.3.17	SDB	ABHIJIT	ABHIJIT	0.6/5	EMBOSSING/PUNCHING LOCATIONS ADDED.
04	28.08.13		ABHIJIT			IN NOTE–4 LATEST REV. WAS ALT.01.
03	27.12.11		TG			BOM IT.001 R.WT.115 KG & FINISH WT.94KG WERE NOT ON.
02	12.05.11		S.ANAND			TM–11486 WAS ON 4TMS.096.059.
01	07.01.11					DRG. UPDATE & DIGITIZED.

INVENTORY NO. | SIGN. & DATE | REF. DRG. NO.

THE INFORMATION ON THIS DOCUMENT IS THE PROPERTY OF BHARAT HEAVY ELECTRICALS LIMITED. IT MUST NOT BE USED DIRECTLY OR INDIRECTLY IN ANY WAY DETRIMENTAL TO THE INTEREST OF THE COMPANY.

SIZE A0